COMMON GEOMETRIC PRACTICES
RURAL LOCAL ROADS

		TRAFFIC VOLUME					
	TERRIAN	UNDER 50 A.D.T.	50-250 A.D.T.	250-400 A.D.T.	400-1500 A.D.T.	1500-2000 A.D.T.	OVER 2000 A.D.T.
MINIMUM DESIGN SPEED (M.P.H.) (6) (7)	LEVEL	30		40	50		
	ROLLING	20	30		40		
	MOUNTAIN	20			30		

	DESIGN SPEED	UNDER 400 A.D.T.	400-1500 A.D.T.	1500-2000 A.D.T.	OVER 2000 A.D.T.
PAVEMENT WIDTH (FEET) (4) (8)	15 MPH	18	20 (9)	20	22
	20 MPH			22	24 (11)
	25 MPH				
	30 MPH				
	40 MPH				
	45 MPH	20	22		
	50 MPH				
	55 MPH	22		24 (11)	
	60 MPH				
MIN. GRADED SHOULDER WIDTH (FEET) (5)	ALL SPEEDS	2	5 (9) (10)	6	8
MIN. CLEAR ROADWAY WIDTH OF NEW AND RECONSTRUCTED BRIDGES	ALL SPEEDS	APPROACH ROADWAY WIDTH			

	DESIGN SPEED	eMAX. 4%	eMAX. 6%	eMAX. 8%
MINIMUM RADIUS (FEET)	20 MPH	125	115	105
	25 MPH	205	185	170
	30 MPH	300	275	250
	35 MPH	420	380	350
	40 MPH	565	510	465
	45 MPH	730	660	600
	50 MPH	930	835	760

NORMAL PAVEMENT CROSS SLOPES (3)	RATE OF CROSS SLOPE = 2%							
NORMAL SHOULDER CROSS SLOPES	EARTH = 8%				PAVED = 4%			
MAXIMUM GRADE (PERCENT)	M.P.H.	20	25	30	35	40	45	50
	LEVEL	8	7					6
	ROLLING	11		10			9	8
	MOUNTAIN	16	15	14		13	12	10
MINIMUM STOPPING SIGHT DISTANCE (1)	(FEET)	115	155	200	250	305	360	425
MINIMUM PASSING SIGHT DISTANCE (2)	(FEET)	710	900	1090	1280	1470	1625	1835

(1) MINIMUM STOPPING SIGHT DISTANCE BASED ON HEIGHT OF EYE OF 3.5 FT AND HEIGHT OF OBJECT OF 2.0 FT. CONSIDER BOTH HORIZONTAL AND VERTICAL ALIGNMENT.

(2) MINIMUM PASSING SIGHT DISTANCE BASED ON HEIGHT OF EYE OF 3.5 FT AND HEIGHT OF OBJECT OF 3.5 FT. CONSIDER BOTH HORIZONTAL AND VERTICAL ALIGNMENTS.

(3) NORMAL PAVEMENT CROSS SLOPES ON BRIDGES IS 2%.

(4) CONSIDER CURVE WIDENING ON PROJECTS WITH SIGNIFICANT TRUCK VOLUMES.

(5) WIDEN 3 FT FOR GUARDRAIL.

(6) WHERE SELECTED DESIGN SPEED IS > 50 MPH, USE COMMON GEOMETRIC PRATICES EXHIBIT 500-02 FOR RURAL COLLECTOR ROADS.

(7) DOCUMENT AND RETAIN JUSTIFICATION FOR A DESIGN SPEED LESS THAN THE REGULATORY OR POSTED SPEED IN THE PROJECT FILES.

(8) FOR ROADS < 400 ADT, REFER TO AASHTO'S "GEOMETRIC DESIGN GUIDELINES FOR VERY LOW-VOLUME LOCAL ROADS (ADT≤400)".

(9) FOR ROADS IN MOUNTAINOUS TERRAIN WITH DESIGN VOLUME OF 400 TO 600 VEH/DAY, USE 18 FT TRAVELED WAY WIDTH AND 2 FT SHOULDER WIDTH.

(10) MAY BE ADJUSTED TO ACHIEVE A MINIMUM ROADWAY WIDTH OF 30 FT FOR DESIGN SPEEDS > THAN 40 MPH.

(11) WHERE THE WIDTH OF THE TRAVELED WAY IS SHOWN AS 24 FT, THE WIDTH MAY REMAIN AT 22 FT ON RECONSTRUCTED HIGHWAYS WHERE SAFETY RECORDS AND ALIGNMENT ARE SATISFACTORY.

COMMON GEOMETRIC PRACTICES
RURAL COLLECTOR ROADS

		TRAFFIC VOLUME			
	TERRIAN	UNDER 400 A.D.T.	400-2000 A.D.T.		OVER 2000 A.D.T.
MINIMUM DESIGN SPEED (M.P.H.) (7)	LEVEL	40	50		60
	ROLLING	30	40		50
	MOUNTAIN	20	30		40
PAVEMENT WIDTH (FEET) (1) (8)	DESIGN SPEED	UNDER 400 A.D.T.	400-1500 A.D.T.	1500-2000 A.D.T.	OVER 2000 A.D.T.
	20 MPH	20 (9)	20	22	24
	25 MPH				
	30 MPH				
	35 MPH		22		
	40 MPH				
	45 MPH	20			
	50 MPH				
	55 MPH	22		24	
	60 MPH				
MINIMUM GRADED SHOULDER WIDTH (FEET) (6)	ALL SPEEDS	2	5 (10)	6	8
MIN. CLEAR ROADWAY WIDTH OF NEW AND RECONSTRUCTED BRIDGES	ALL SPEEDS	APPROACH ROADWAY WIDTH			

	DESIGN SPEED	eMAX. 4%	eMAX. 6%	eMAX. 8%
MINIMUM RADIUS (FEET)	20 MPH	125	115	105
	25 MPH	205	185	170
	30 MPH	300	275	250
	35 MPH	420	380	350
	40 MPH	565	510	465
	45 MPH	730	660	600
	50 MPH	930	835	760
	55 MPH	1190	1065	965
	60 MPH	1505	1340	1205
NORMAL PAVEMENT CROSS SLOPES (4)	RATE OF CROSS SLOPE = 2%			
NORMAL SHOULDER CROSS SLOPES	EARTH = 8%		PAVED = 4%	

	M.P.H.	20	25	30	35	40	45	50	55	60
MAXIMUM GRADE (PERCENT) (5)	LEVEL	7						6		5
	ROLLING	10		9		8		7		6
	MOUNTAIN	12	11	10				9		8
MINIMUM STOPPING SIGHT DISTANCE (2)	(FEET)	115	155	200	250	305	360	425	495	570
MINIMUM PASSING SIGHT DISTANCE (3)	(FEET)	710	900	1090	1280	1470	1625	1835	1985	2135

(1) WIDEN PAVEMENT ON CURVES IN ACCORDANCE WITH APPROVED DESIGN STANDARDS. REFER TO CURRENT STANDARD DRAWING FOR ADDITIONAL DETAIL.

(2) MINIMUM STOPPING SIGHT DISTANCE BASED ON HEIGHT OF EYE OF 3.5 FT AND HEIGHT OF OBJECT OF 2.0FT. CONSIDER BOTH HORIZONTAL AND VERTICAL ALIGNMENTS.

(3) MINIMUM PASSING SIGHT DISTANCES BASED ON HEIGHT OF EYE 3.5 FT AND HEIGHT OF OBJECT OF 3.5 FT. CONSIDER BOTH HORIZONTAL AND VERTICAL ALIGNMENTS.

(4) NORMAL PAVEMENT CROSS SLOPES ON BRIDGES IS 2%.

(5) MAY USE ONE PERCENT STEEPER MAXIMUM GRADES ON SHORT LENGTHS (LESS THAN 500 FT) AND ON ONE-WAY DOWN GRADES.

(6) WIDEN 3 FT FOR GUARDRAIL.

(7) DOCUMENT AND RETAIN JUSTIFICATION FOR A DESIGN SPEED LESS THAN THE REGULATORY OR POSTED SPEED IN THE PROJECT FILES.

(8) ON ROADWAYS TO BE RECONSTRUCTED, A 22 FT TRAVELLED WAY MAY BE RETAINED WHERE THE SAFETY RECORDS AND ALIGNMENT ARE SATISFACTORY.

(9) 18 FT MINIMUM WIDTH MAY BE USED FOR ROADWAYS WITH DESIGN VOLUMES UNDER 250 A.D.T.

(10) SHOULDER WIDTH MAY BE REDUCED FOR DESIGN SPEEDS GREATER THAN 30 MPH PROVIDED A MINIMUM ROADWAY WIDTH OF 30 FT IS MAINTAINED.

COMMON GEOMETRIC PRACTICES
RURAL ARTERIAL ROADS (OTHER THAN FREEWAYS) (4)

		TRAFFIC VOLUME			
		UNDER 400 A.D.T.	400-1500 A.D.T.	1500-2000 A.D.T.	OVER 2000 A.D.T.
	DESIGN SPEED (6)	40-50 M.P.H.	40-70 M.P.H.	40-70 M.P.H.	40-70 M.P.H.
PAVEMENT WIDTH (FEET)	40 MPH	22	22	22	24
	45 MPH				
	50 MPH			24	
	55 MPH				
	60 MPH	24	24		
	65 MPH				
	70 MPH				
MINIMUM GRADED SHOULDER WIDTH (FT) (5)	ALL SPEEDS	4	6	6	8
MINIMUM CLEAR ROADWAY WIDTH OF NEW AND RECONSTRUCTED BRIDGES	ALL SPEEDS	APPROACH ROADWAY WIDTH (1)			

	DESIGN SPEED	eMAX. 4%	eMAX. 6%	eMAX. 8%
MINIMUM RADIUS (FEET)	30 MPH	300	275	250
	35 MPH	420	380	350
	40 MPH	565	510	465
	45 MPH	730	660	600
	50 MPH	930	835	760
	55 MPH	1190	1065	965
	60 MPH	1505	1340	1205
	65 MPH	—	1660	1485
	70 MPH	—	2050	1820
NORMAL PAVEMENT CROSS SLOPES (3)	RATE OF CROSS SLOPE = 2%			
NORMAL SHOULDER CROSS SLOPES	EARTH = 8%		PAVED = 4%	

MAXIMUM GRADE (PERCENT)	M.P.H.	30	35	40	45	50	55	60	65	70	75	80
	LEVEL	-		5		4		3				
	ROLLING	-		6		5		4				
	MOUNTAIN	-		8	7		6		5			
MINIMUM STOPPING SIGHT DISTANCE (1)	(FEET)	200	250	305	360	425	495	570	645	730	820	910
MINIMUM PASSING SIGHT DISTANCE (2)	(FEET)	1090	1280	1470	1625	1835	1985	2135	2285	2480	2580	2680

(1) MINIMUM STOPPING SIGHT DISTANCES ARE BASED ON HEIGHT OF EYE OF 3.5 FT AND HEIGHT OF OBJECT OF 2.0FT. BOTH HORIZONTAL AND VERTICAL ALIGNMENTS ARE CONSIDERED.

(2) MINIMUM PASSING SIGHT DISTANCES ARE BASED ON HEIGHT OF EYE 3.5 FT AND HEIGHT OF OBJECT OF 3.5 FT. BOTH HORIZONTAL AND VERTICAL ALIGNMENTS ARE CONSIDERED.

(3) NORMAL PAVEMENT CROSS SLOPES ON BRIDGES SHALL BE 2%.

(4) FOR GUIDANCE ON FREEWAYS, REFER TO AASHTO, "A POLICY ON GEOMETRIC DESIGN OF HIGHWAYS AND STREETS", CURRENT EDITION.

(5) WIDEN 3 FT FOR GUARDRAIL.

(6) JUSTIFICATION FOR A DESIGN SPEED LESS THAN THE REGULATORY OR POSTED SPEED MUST BE DOCUMENTED AND AVAILABLE FOR REVIEW IN THE PROJECT FILES.

COMMON GEOMETRIC PRACTICES
URBAN ROADWAYS (OTHER THAN FREEWAYS) (13)

		URBAN LOCAL STREETS	URBAN COLLECTOR STREETS	URBAN ARTERIAL STREETS
DESIGN SPEED (14)		20 M.P.H. - 30 M.P.H.	MIN. 30 M.P.H.	30 M.P.H. - 60 M.P.H.
NUMBER OF LANES		MINIMUM 2	MINIMUM 2 (4)	MINIMUM 2 (4)
LANE WIDTH	RESIDENTIAL	MIN, 10' (1)	MIN, 10' (2)	12' FREE FLOW CONDITION (2) 11' MIN. INTERRUPTED FLOW CONDITION
	COMMERCIAL	MIN. 11'	MIN. 11'	
	INDUSTRIAL	MIN. 12' (3)	MIN. 12' (3)	
SIDEWALK	RESIDENTIAL COMMERCIAL	MINIMUM 4' DESIRABLE 8' (16)		
MINIMUM CLEAR ROADWAY WIDTH OF NEW AND (11) RECONSTRUCTED BRIDGES		MINIMUM CURB TO CURB WIDTH		
BERM AREA (5)		10' TYPICAL		
MINIMUM RADIUS (FEET)		(6)		
MAXIMUM GRADE (PERCENT)		- R) - MAX. 15% - C) - MAX. 8% (12) - I) - MAX. 8%		
NORMAL PAVEMENT CROSS SLOPE (8)		RATE OF CROSS SLOPE = 2%		
NORMAL SHOULDER CROSS SLOPE		EARTH - 8%		PAVED - 4%
SUPERELEVATION		(10) 4% MAX.	4% MAX.	4% - 6% MAX.

MAXIMUM GRADE (PERCENT)	M.P.H.	30	35	40	45	50
	LEVEL	9			8	7
	ROLLING	11	10		9	8
	MOUNTAIN	12			11	10

(9) M.P.H.	30	35	40	45	50	55	60
LEVEL	8	7	6			5	
ROLLING	9	8	7			6	
MOUNTAIN	11	10	9			8	

MINIMUM STOPPING SIGHT DISTANCE (FEET) (7)	M.P.H.	20	25	30	35	40	45	50	55	60
	MIN.	115	155	200	250	305	360	425	495	570

- R) = RESIDENTIAL - C) = COMMERCIAL - I) = INDUSTRIAL

(1) TURNING LANES : 9' MINIMUM – 12' DESIRABLE; PARKING LANES : RESIDENTIAL – 7' MINIMUM – 10' DESIRABLE; COMMERCIAL & INDUSTRIAL – 9' MINIMUM – 12' DESIRABLE.

(2) TURNING LANES : 10' MINIMUM – 12' DESIRABLE; PARKING LANES : 9' MINIMUM – 12' DESIRABLE.

(3) VERTICAL CURBS WITH HEIGHTS OF 6" OR GREATER ADJACENT TO TRAVELED WAY SHOULD BE OFFSET A MINIMUM OF 1 FOOT. WHEN A CURB AND GUTTER SECTION IS PROVIDED, THE GUTTER PAN WIDTH, NORMALLY 2 FEET, SHOULD BE USED AS THE OFFSET DISTANCE.

(4) THE NUMBER OF LANES TO BE PROVIDED ON STREETS WITH A CURRENT ADT OF 2000 OR GREATER SHOULD BE DETERMINED BY A HIGHWAY CAPACITY ANALYSIS OF THE DESIGN TRAFFIC VOLUMES. SUCH ANALYSIS SHOULD BE MADE FOR FUTURE DESIGN TRAFFIC. (DESIRABLE)

(5) THE BERM AREA IS TYPICALLY FROM FACE OF CURB TO 2 FEET BEHIND BACK OF SIDEWALK.

(6) REFER TO CHAPTER 3 OF AASHTO'S "A POLICY ON GEOMETRIC DESIGN OF HIGHWAYS AND STREETS" CURRENT EDITION.

(7) MINIMUM STOPPING SIGHT DISTANCES ARE BASED ON HEIGHT OF EYE 3.5 FT. & HEIGHT OF OBJECT OF 2.0 FT. BOTH HORIZONTAL & VERTICAL ALIGNMENTS CONSIDERED.

(8) NORMAL PAVEMENT CROSS SLOPES ON BRIDGES SHALL BE 2 PERCENT.

(9) ARTERIALS WITH LARGE NUMBERS OF TRUCKS AND OPERATING NEAR CAPACITY SHOULD CONSIDER GRADES FLATTER THAN THOSE IN RURAL SECTIONS TO AVOID UNDESIRABLE REDUCTIONS IN SPEEDS.

(10) SUPERELEVATION MAY NOT BE REQUIRED ON LOCAL STREETS IN RESIDENTIAL AND COMMERCIAL AREAS.

(11) THE BRIDGE WIDTH FOR URBAN ROADWAYS WITH SHOULDERS AND NO CURBS SHOULD NOT BE LESS THAN WIDTHS SHOWN FOR RURAL ROADS APPROVED ROADWAY WIDTHS.

(12) MAXIMUM GRADES OF SHORT LENGTHS (LESS THAN 500') AND ON ONE-WAY DOWN GRADES MAY BE ONE PERCENT STEEPER.

(13) FOR GUIDANCE ON FREEWAYS, REFER TO AASHTO, "A POLICY ON GEOMETRIC DESIGN OF HIGHWAYS AND STREETS."

(14) INTERMEDIATE DESIGN SPEEDS (5 M.P.H. INCREMENTS) MAY BE APPROPRIATE WHERE TERRAIN AND OTHER ENVIRONMENTAL CONDITIONS DICTATE.

(15) REFER TO AASHTO'S "GUIDE FOR THE DEVELOPMENT OF BICYCLY FACILITIES", CURRENT EDITION, WHEN COMBINING A PEDESTRIAN SIDEWALK WITH A BICYCLE PATH.

TYPICAL SECTIONS

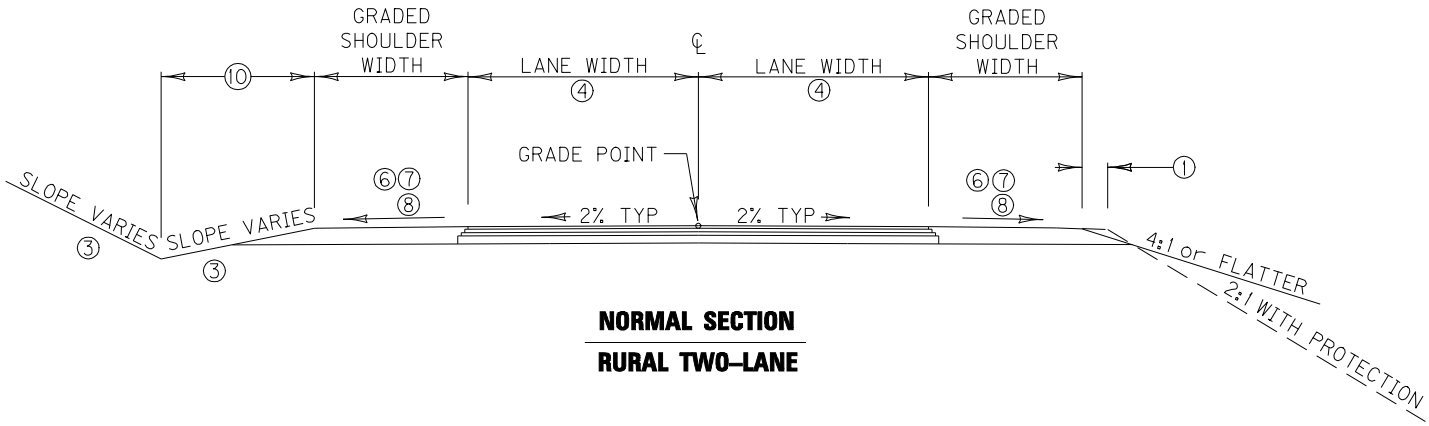

NORMAL SECTION

RURAL TWO–LANE

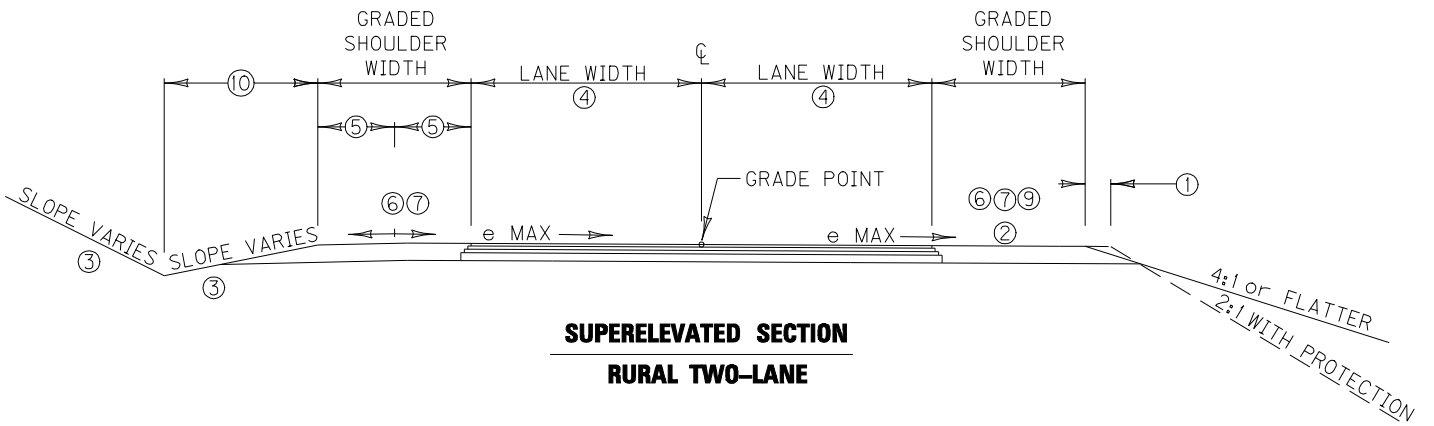

SUPERELEVATED SECTION

RURAL TWO–LANE

① SHOULDERS SHALL BE WIDENED 3 FEET WHERE GUARDRAIL IS TO BE INSTALLED.

② SUPERELEVATED SHOULDERS - CONSTRUCT TO STANDARD SUPERELEVATION, EXCEPT NOT FLATTER THAN THE SLOPE INDICATED FOR NORMAL SECTION.

③ REFER TO AASHTO'S "ROADSIDE DESIGN GUIDE", CURRENT EDITION, FOR SPECIFIC SLOPE GUIDANCE.

④ REFER TO AASHTO'S "A POLICY ON GEOMETRIC DESIGN OF HIGHWAY AND STREETS", CURRENT EDITION, FOR SUGGESTED LANE WIDTHS OF THE VARIOUS ROADWAY CLASSIFICATIONS. FOR ROADWAYS WITH ADT < 400, REFER TO AASHTO'S "GEOMETRIC DESIGN GUIDELINES FOR VERY LOW-VOLUME LOCAL ROADS".

⑤ IF THE SHOULDER WIDTH IS GREATER THAN 4 FEET, A PORTION OF THE OUTSIDE SHOULDER, THE SHOULDER ON THE HIGH SIDE, IS NOT SUPERELEVATED TO MATCH THE MAINLINE RATE. THE NON-SUPERELEVATED SHOULDER REMAINS SLOPED AWAY FROM THE ROADWAY. FOR SHOULDER WIDTHS GREATER THAN 4 FEET AND LESS THAN OR EQUAL TO 6 FEET, THE NON-SUPERELEVATED SHOULDER WIDTH WILL BE 2 FEET. FOR SHOULDER WIDTHS GREATER THAN 6 FEET, THE SHOULDER "BREAK" IS TO OCCUR AT THE MIDPOINT OF THE SHOULDER WIDTH. THIS REQUIREMENT MAY NOT HAVE APPLICATION TO INSIDE SHOULDERS OF MEDIAN SECTIONS AND MULTILANE FACILITIES. FOR THE "ROLL-OVER" BETWEEN SUPERABLE AND NONSUPERABLE SHOULDER, THE ALGEBRAIC DIFFERENCE IN RATE OF CROSS-SLOPE IS NOT TO EXCEED 12.0 PERCENT.

⑥ USABLE SHOULDER - THE CLEAR AREA BETWEEN THE TRAVELED WAY AND ANY BARRIER OR BREAK POINT. TYPICALLY THIS DISTANCE IS THE SAME AS THE GRADED SHOULDER WIDTH.

⑦ SHOULDER MAY BE PAVED TO WITHIN 1 FOOT OF THE SLOPE BREAK OR TO THE FACE OF THE BARRIER.

⑧ NORMAL SHOULDER CROSS SLOPE: EARTH = 8%, PAVED = 4%

⑨ AFTER THE NORMAL SHOULDER CROSS-SLOPE IS EXCEEDED, THE FULL WIDTH OF THE INSIDE SHOULDER IS ROTATED TO MATCH THE ROADWAY SUPERELEVATION.

⑩ WIDTH VARIES PER DRAINAGE/"ROADSIDE DESIGN GUIDE" REQUIREMENTS.

DRAWING NOT TO SCALE

TYPICAL SECTIONS

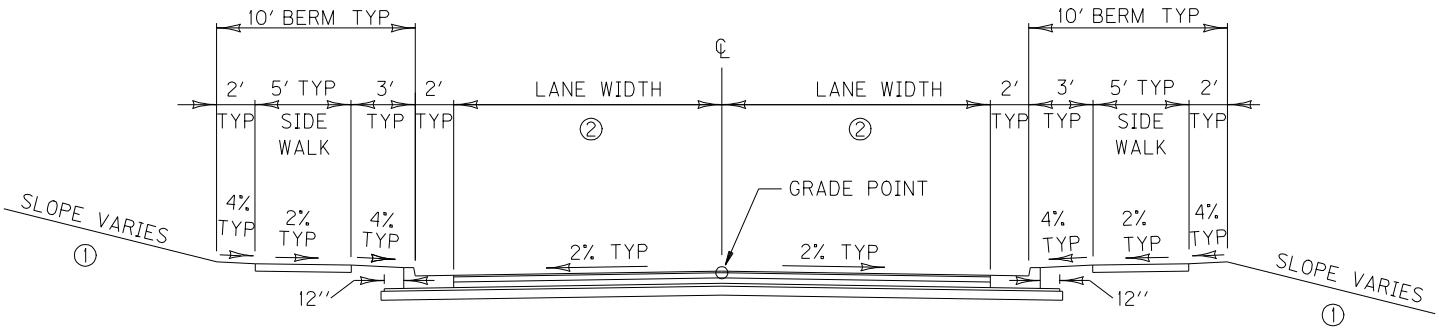

NORMAL SECTION

CURB AND GUTTER
URBAN TWO-LANE

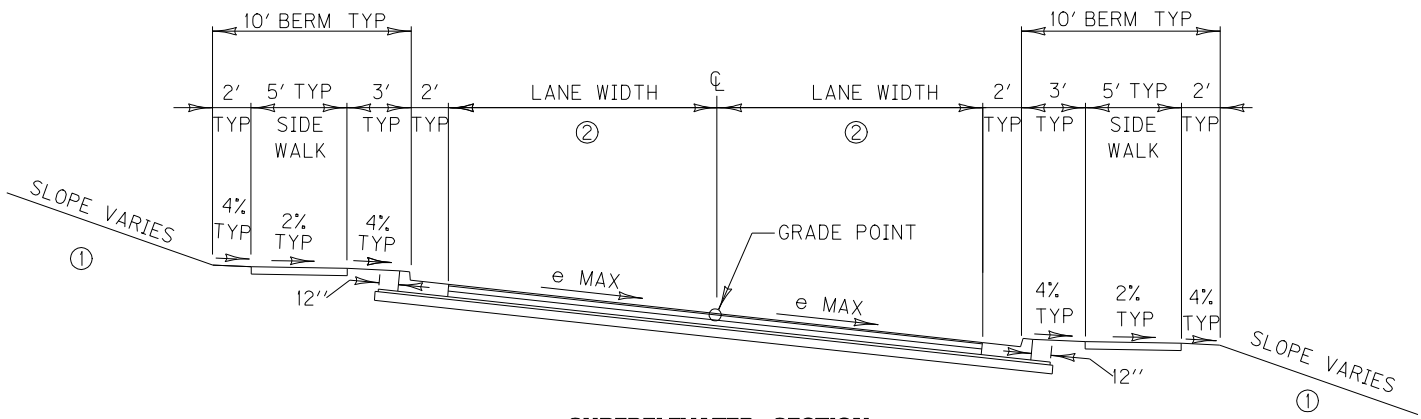

SUPERELEVATED SECTION

URBAN TWO-LANE
CURB AND GUTTER

① REFER TO AASHTO'S ''ROADSIDE DESIGN GUIDE'', CURRENT EDITION, FOR SPECIFIC SLOPE GUIDELINES.

② REFER TO AASHTO'S ''A POLICY ON GEOMETRIC DESIGN OF HIGHWAY AND STREETS'', CURRENT EDITION, FOR SUGGESTED LANE WIDTHS OF THE VARIOUS ROADWAY CLASSIFICATIONS. FOR ROADWAYS WITH ADT < 400, REFER TO AASHTO'S ''GEOMETRIC DESIGN GUIDELINES FOR VERY LOW-VOLUME LOCAL ROADS''.

DRAWING NOT TO SCALE

TYPICAL SECTIONS

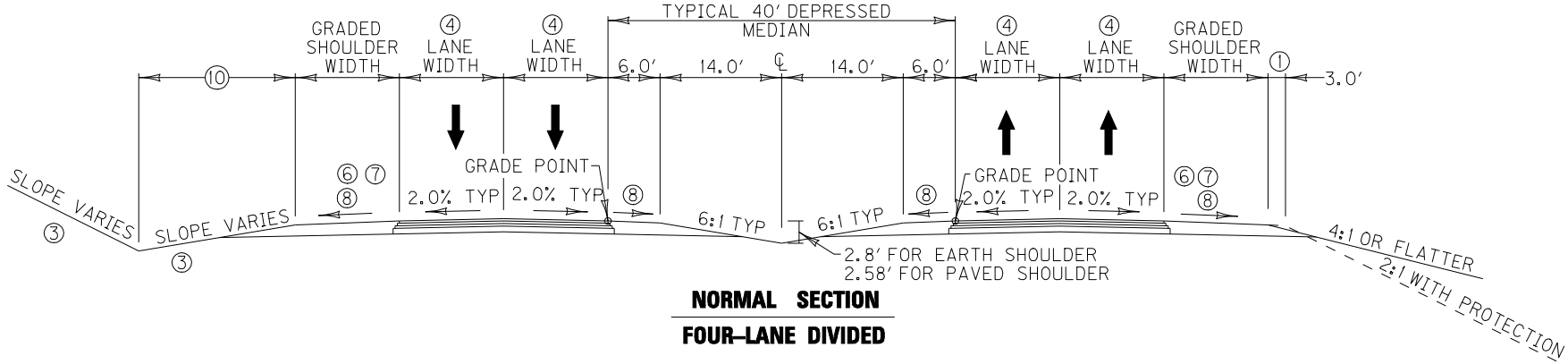

NORMAL SECTION

FOUR-LANE DIVIDED

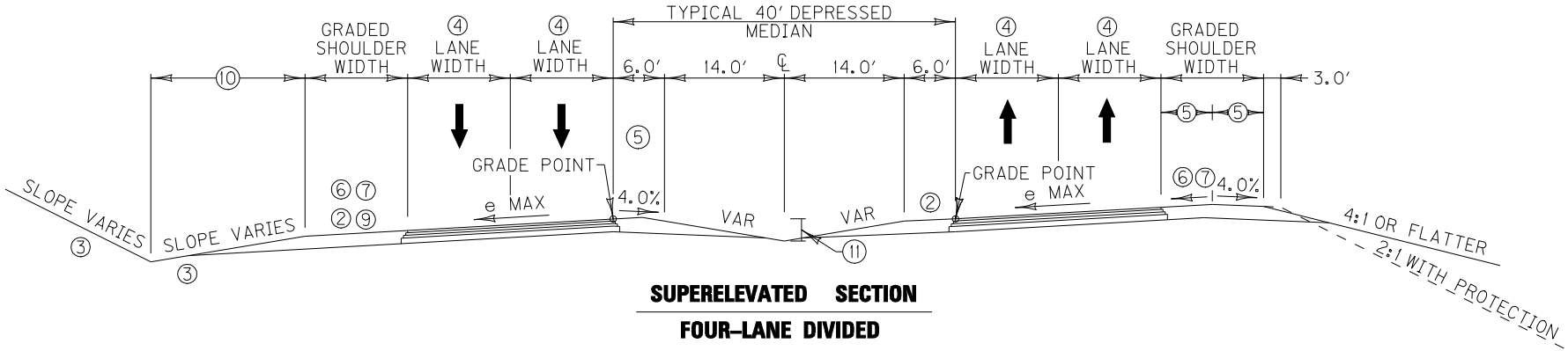

SUPERELEVATED SECTION

FOUR-LANE DIVIDED

① SHOULDERS SHALL BE WIDENED 3 FEET WHERE GUARDRAIL IS TO BE INSTALLED.

② SUPERELEVATED SHOULDERS - CONSTRUCT TO STANDARD SUPERELEVATION, EXCEPT NOT FLATTER THAN THE SLOPE INDICATED FOR NORMAL SECTION.

③ REFER TO AASHTO'S "ROADSIDE DESIGN GUIDE", CURRENT EDITION, FOR SPECIFIC SLOPE GUIDANCE.

④ REFER TO AASHTO'S "A POLICY ON GEOMETRIC DESIGN OF HIGHWAY AND STREETS", CURRENT EDITION, FOR SUGGESTED LANE WIDTHS OF THE VARIOUS ROADWAY CLASSIFICATIONS.

⑤ IF THE SHOULDER WIDTH IS GREATER THAN 4 FEET, A PORTION OF THE OUTSIDE SHOULDER, THE SHOULDER ON THE HIGH SIDE, IS NOT SUPERELEVATED TO MATCH THE MAINLINE RATE. THE NON-SUPERELEVATED SHOULDER REMAINS SLOPED AWAY FROM THE ROADWAY. FOR SHOULDER WIDTHS GREATER THAN 4 FEET AND LESS THAN OR EQUAL TO 6 FEET, THE NON-SUPERELEVATED SHOULDER WIDTH WILL BE 2 FEET. FOR SHOULDER WIDTHS GREATER THAN 6 FEET, THE SHOULDER "BREAK" IS TO OCCUR AT THE MIDPOINT OF THE SHOULDER WIDTH. THIS REQUIREMENT MAY NOT HAVE APPLICATION TO INSIDE SHOULDERS OF MEDIAN SECTIONS AND MULTILANE FACILITIES. FOR THE "ROLL-OVER" BETWEEN SUPERABLE AND NONSUPERABLE SHOULDER, THE ALGEBRAIC DIFFERENCE IN RATE OF CROSS-SLOPE IS NOT TO EXCEED 12.0 PERCENT.

⑥ USABLE SHOULDER - THE CLEAR AREA BETWEEN THE TRAVELED WAY AND ANY BARRIER OR BREAK POINT. TYPICALLY THIS DISTANCE IS THE SAME AS THE GRADED SHOULDER WIDTH.

⑦ SHOULDER MAY BE PAVED TO WITHIN 1 FOOT OF THE SLOPE BREAK OR TO THE FACE OF THE BARRIER.

⑧ NORMAL SHOULDER CROSS SLOPE: EARTH = 8%, PAVED = 4%

⑨ AFTER THE NORMAL SHOULDER CROSS-SLOPE IS EXCEEDED, THE FULL WIDTH OF THE INSIDE SHOULDER IS ROTATED TO MATCH THE ROADWAY SUPERELEVATION.

⑩ WIDTH VARIES PER DRAINAGE/"ROADSIDE DESIGN GUIDE" REQUIREMENTS.

⑪ VERTICAL DISTANCE BETWEEN GRADE POINT AND DITCH BOTTOM TO REMAIN CONSTANT IN SUPERELEVATED AND NORMAL SECTION.

DRAWING NOT TO SCALE

EXHIBIT 700-07

3-25-2004

COMMON PRACTICES FOR CROSS ROAD PROFILE ADJUSTMENT

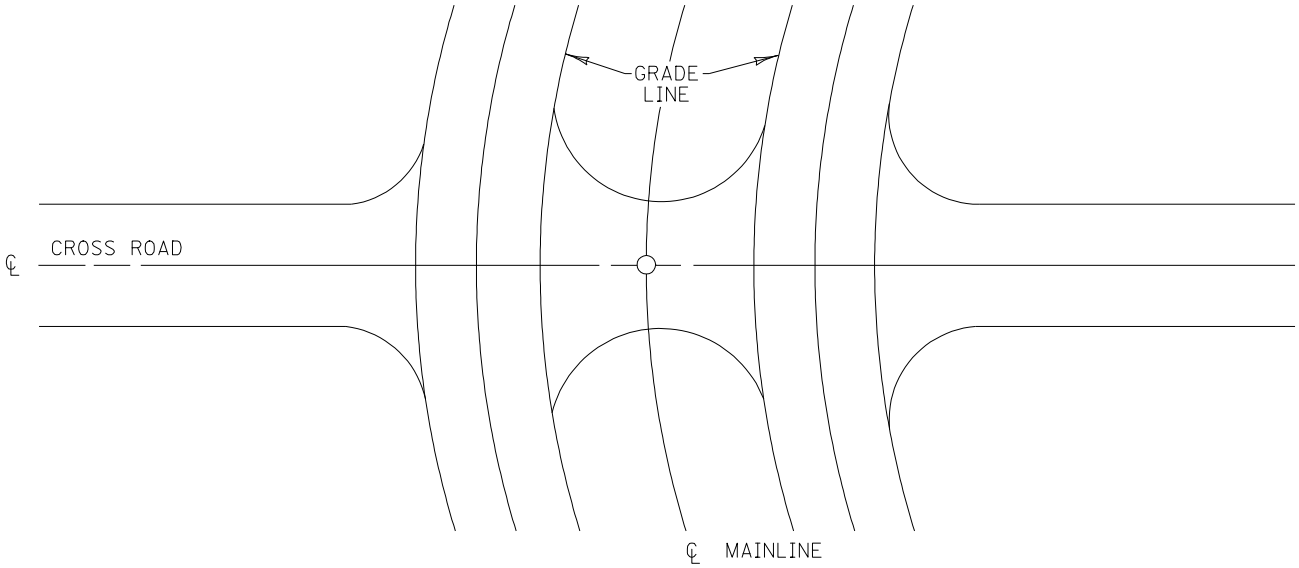

– PLAN –

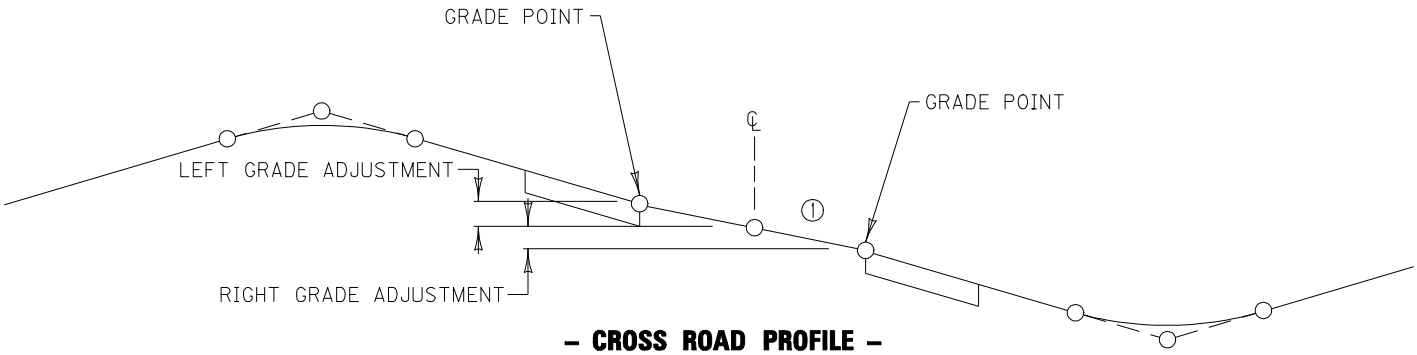

– CROSS ROAD PROFILE –
(ADJUSTED)

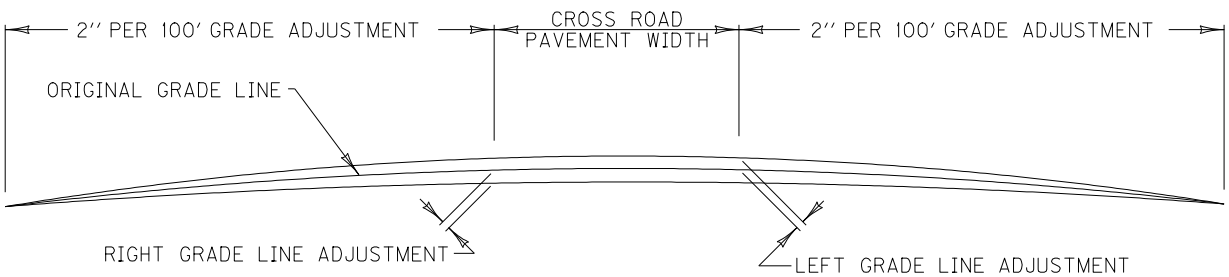

– MAINLINE PROFILE –

1 IF LEFT TURN STORAGE IS REQUIRED, THE SUPERELEVATION OF THE LEFT TURN LANE IS TO BE TRANSITIONED FROM THE SUPERELEVATION OF THE CURVE TO THE SUPERELEVATION CREATED BETWEEN THE TWO MAINLINE PAVEMENTS AT THE CROSS ROAD.

DRAWING NOT TO SCALE

COMMON PRACTICE FOR RAMP TAPERS

EXHIBIT 900-02

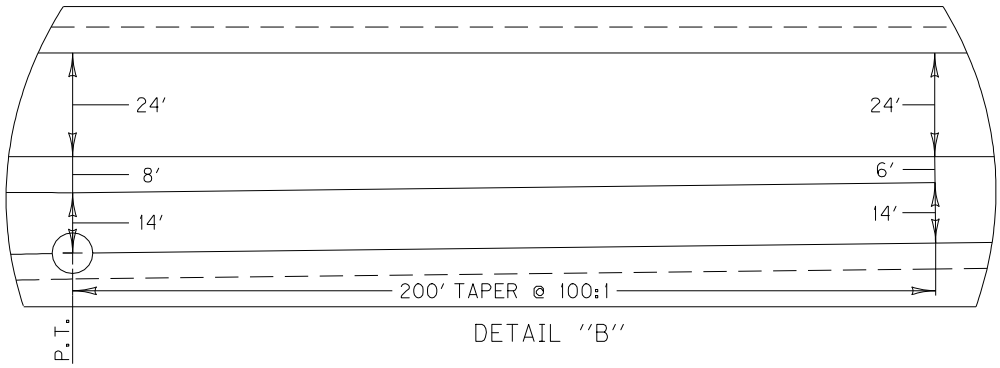

DETAIL ''B''

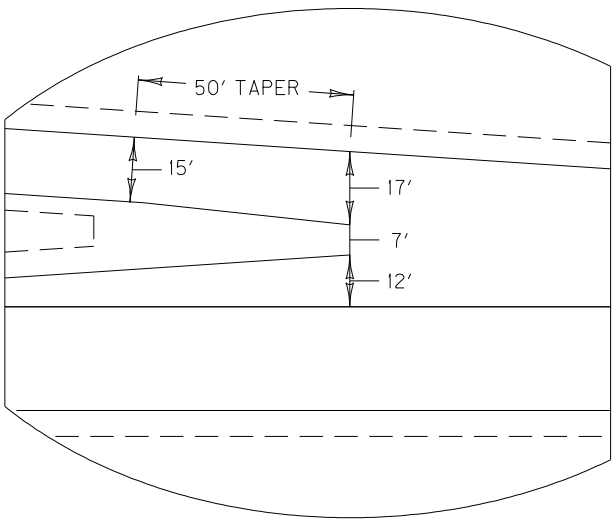

DETAIL ''A''

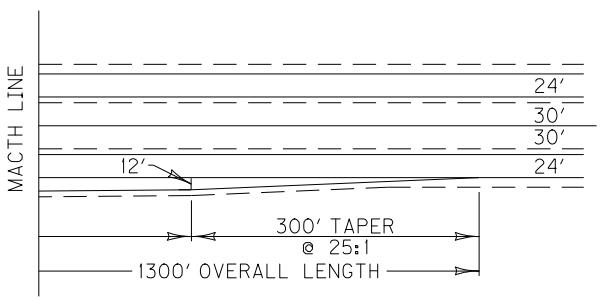

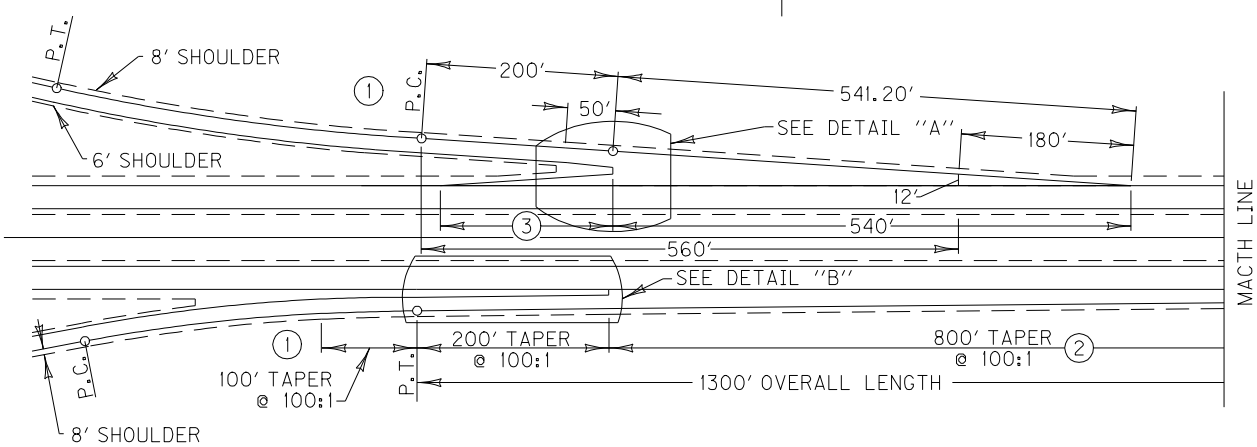

① DESIRABLE DESIGN SPEED OF CURVE IS ≥ .7 OF MAINLINE DESIGN SPEED, IF DESIGN SPEED OF CURVE IS < .7 OF MAINLINE DESIGN SPEED, MAKE AN ANALYSIS (IN ACCORDANCE WITH THE CURRENT AASHTO GREEN BOOK CRITERIA) WITH APPROPRIATE LENGTHENING OF SPEED CHANGE LANE.

② WHEN USING MAINLINE DESIGN SPEED IF ≥ 60 MPH AND MAINLINE GRADE OF ≥ 4% CONCURRENTLY. MAKE AN ANALYSIS (IN ACCORDANCE WITH THE CURRENT AASHTO GREEN BOOK CRITERIA) WITH APPROPRIATE LENGTHENING OF SPEED CHANGE LANE.

③ REQUIRED LENGTH OF NOSE TAPER BASED ON DESIGN SPEED OF MAINLINE:

MAINLINE DESIGN SPEED	LENGTH OF NOSE TAPER
≥ 30 MPH	180 FT.
40 MPH	240 FT.
50 MPH	300 FT.
≥ 60 MPH	360 FT.

DRAWING NOT TO SCALE

COMMON PRACTICES FOR RAMP TERMINALS AT CROSSROADS (RURAL)

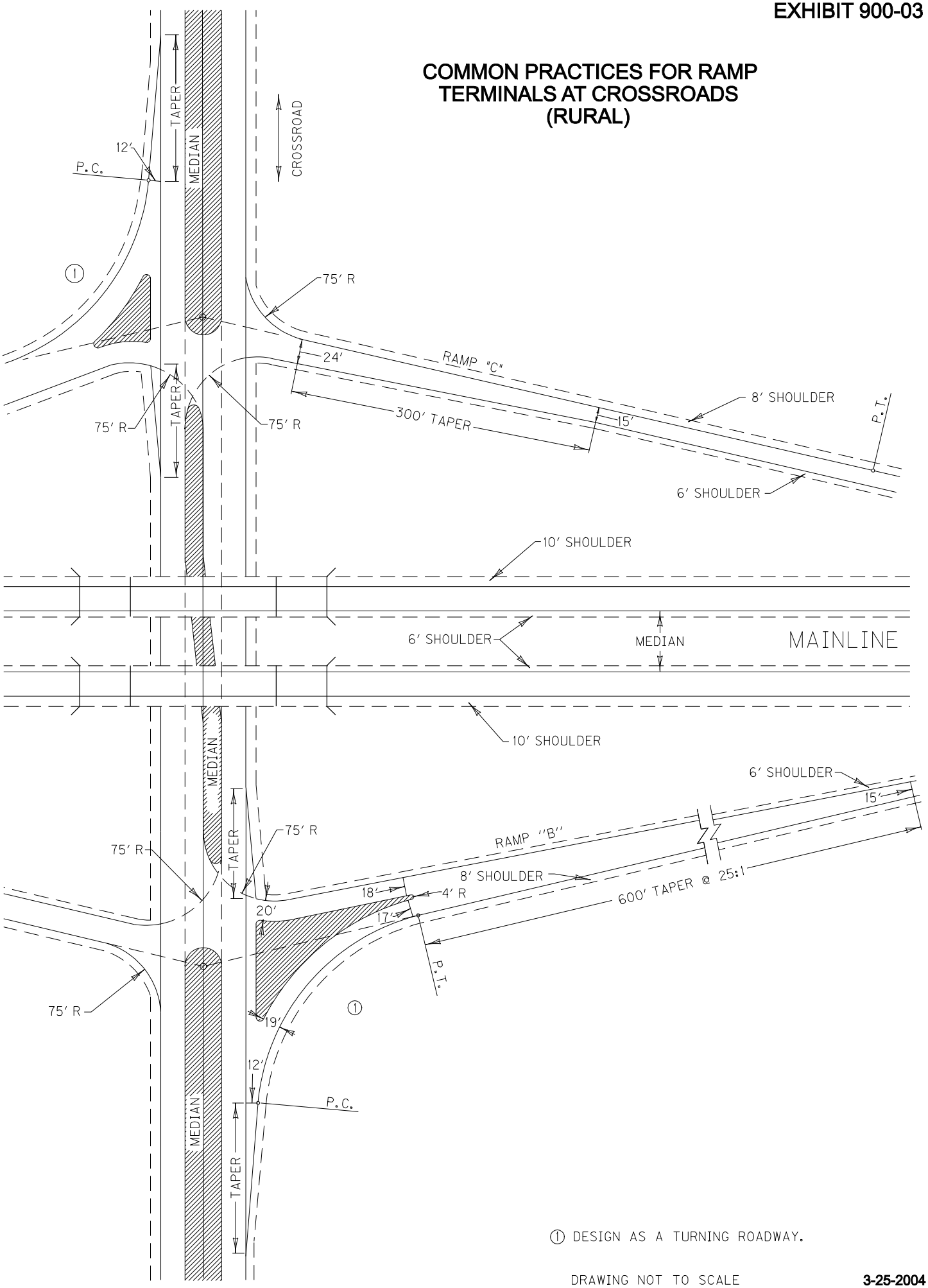

1 DESIGN AS A TURNING ROADWAY.

DRAWING NOT TO SCALE

COMMON PRACTICES FOR RAMP TERMINALS AT CROSSROADS (URBAN)

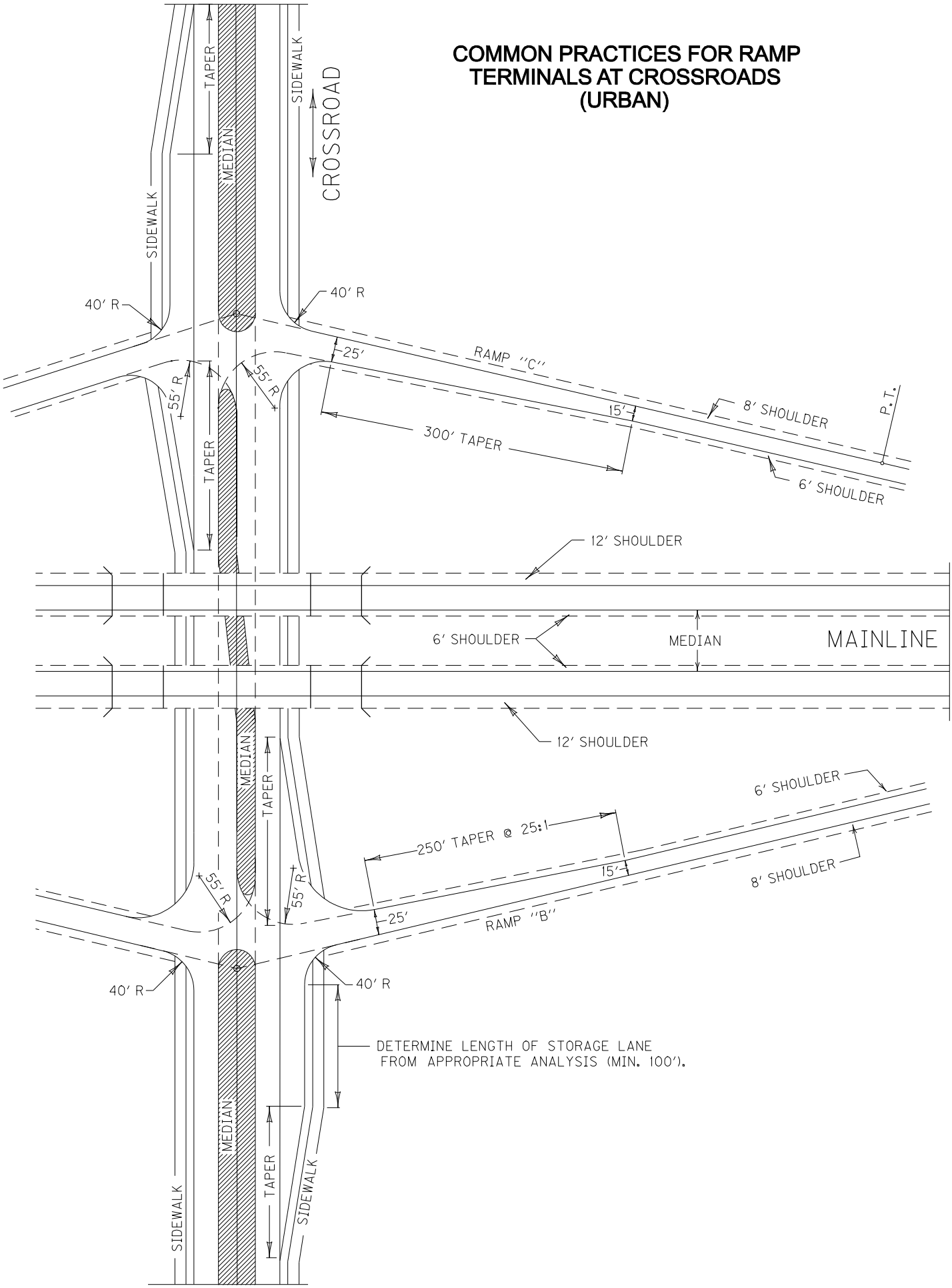

DRAWING NOT TO SCALE

TYPICAL SECTIONS

ONE LANE RAMPS
FILL, EARTH CUT OR ROCK CUT

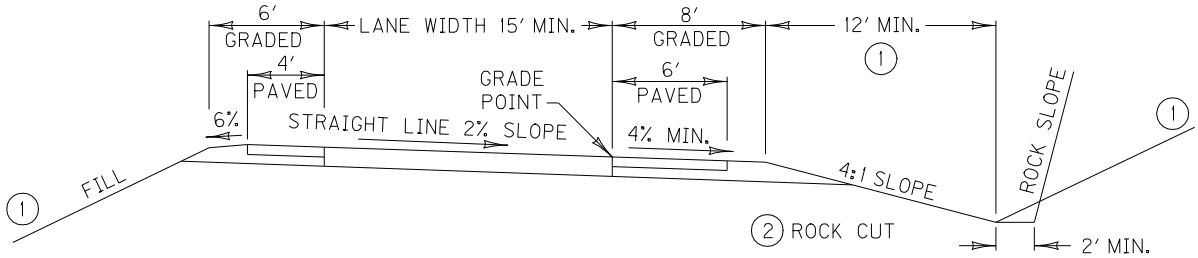

NORMAL SECTION

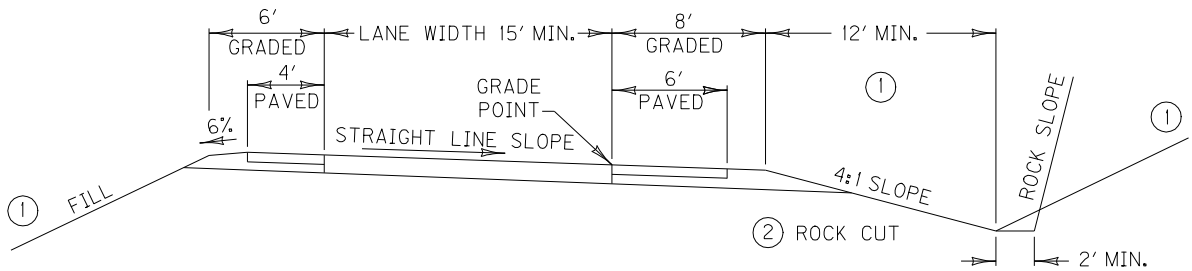

SUPERELEVATED RIGHT

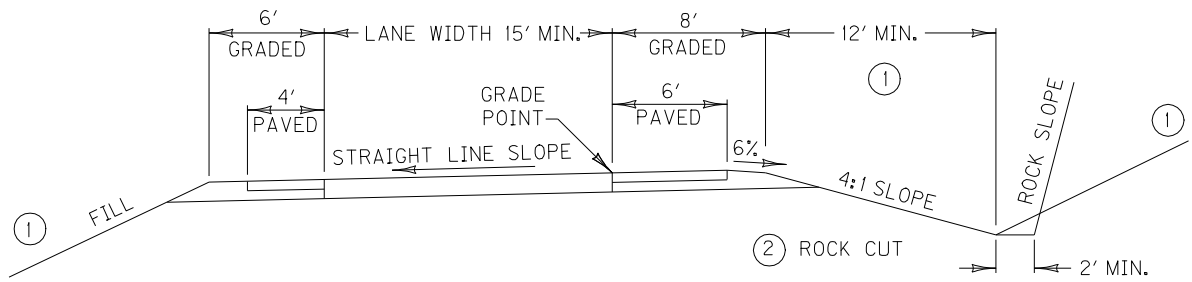

SUPERELEVATED LEFT

THESE TYPICALS ARE COMMONLY UTILIZED IN THE DESIGN OF RAMP TEMPLATES FOR NORMAL OR SUPERELEVATED SECTIONS IN FILL, EARTH CUT OR ROCK CUT SITUATIONS. THE DESIGN ENGINEER IS DIRECTED TO USE THE CURRENT EDITION OF AASHTO'S "A POLICY ON GEOMETRIC DESIGN OF HIGHWAYS AND STREETS" FOR PROJECT SPECIFIC INFORMATION.

(1) SEE AASHTO ROADSIDE DESIGN GUIDE. CONTOUR GRADING PLANS SHALL GOVERN SLOPES AND DIMENSIONS OUTSIDE THE SHOULDER POINT WHERE NOT IN CONFLICT WITH AASHTO ROADSIDE DESIGN GUIDE.

(2) SEE MAINLINE TYPICAL SECTIONS FOR NOTES PERTAINING TO ROCK CUT SITUATIONS.

DRAWING NOT TO SCALE

TYPICAL SECTIONS

TWO LANE RAMPS
FILL, EARTH CUT OR ROCK CUT

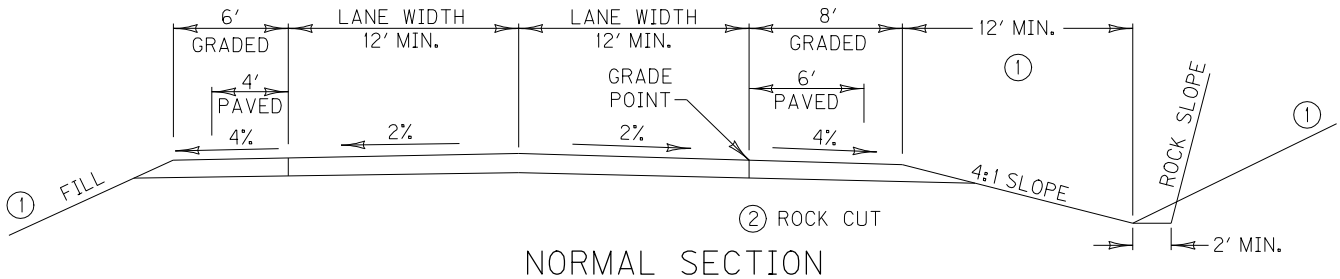

NORMAL SECTION

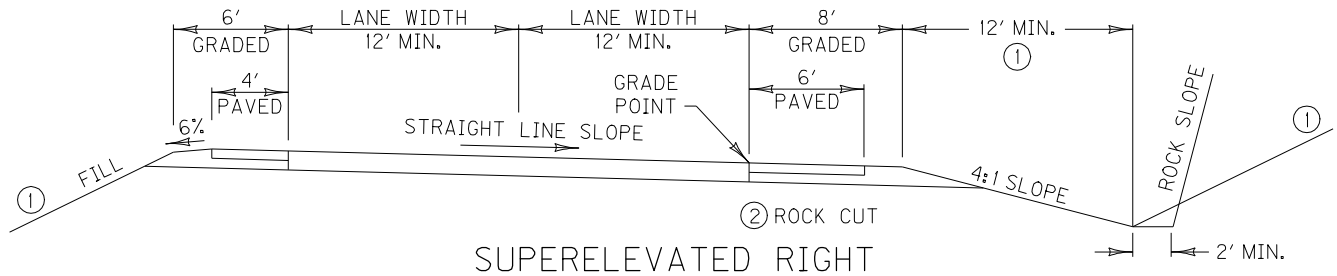

SUPERELEVATED RIGHT

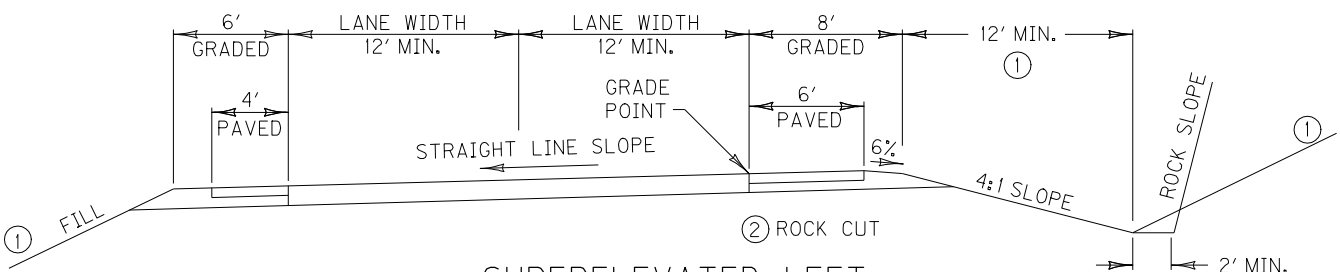

SUPERELEVATED LEFT

THESE TYPICALS ARE COMMONLY UTILIZED IN THE DESIGN OF RAMP TEMPLATES FOR NORMAL OR SUPERELEVATED SECTIONS IN FILL, EARTH CUT OR ROCK CUT SITUATIONS. THE DESIGN ENGINEER IS DIRECTED TO USE THE CURRENT EDITION OF AASHTO'S "A POLICY ON GEOMETRIC DESIGN OF HIGHWAYS AND STREETS" FOR PROJECT SPECIFIC INFORMATION.

(1) SEE AASHTO ROADSIDE DESIGN GUIDE. CONTOUR GRADING PLANS SHALL GOVERN SLOPES AND DIMENSIONS OUTSIDE THE SHOULDER POINT WHERE NOT IN CONFLICT WITH AASHTO ROADSIDE DESIGN GUIDE.

(2) SEE MAINLINE TYPICAL SECTIONS FOR NOTES PERTAINING TO ROCK CUT SITUATIONS.

DRAWING NOT TO SCALE