TYPICAL SECTIONS

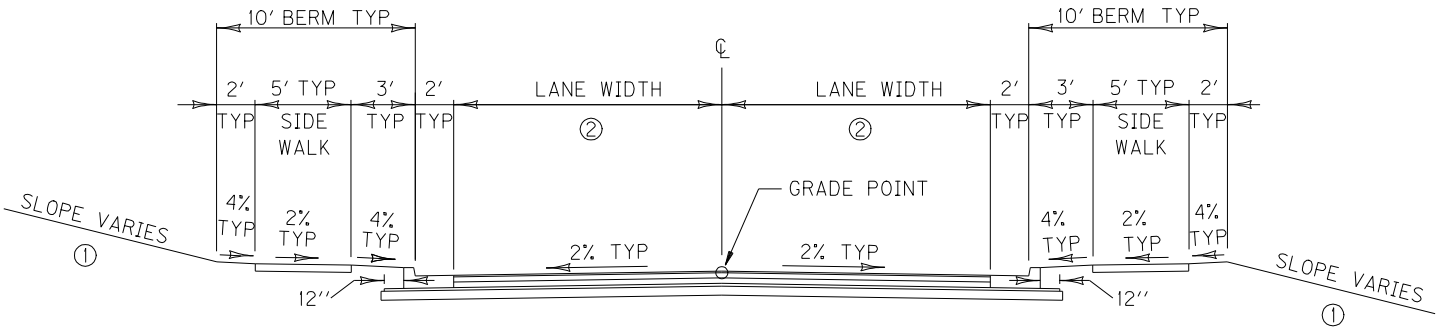

NORMAL SECTION

CURB AND GUTTER
URBAN TWO-LANE

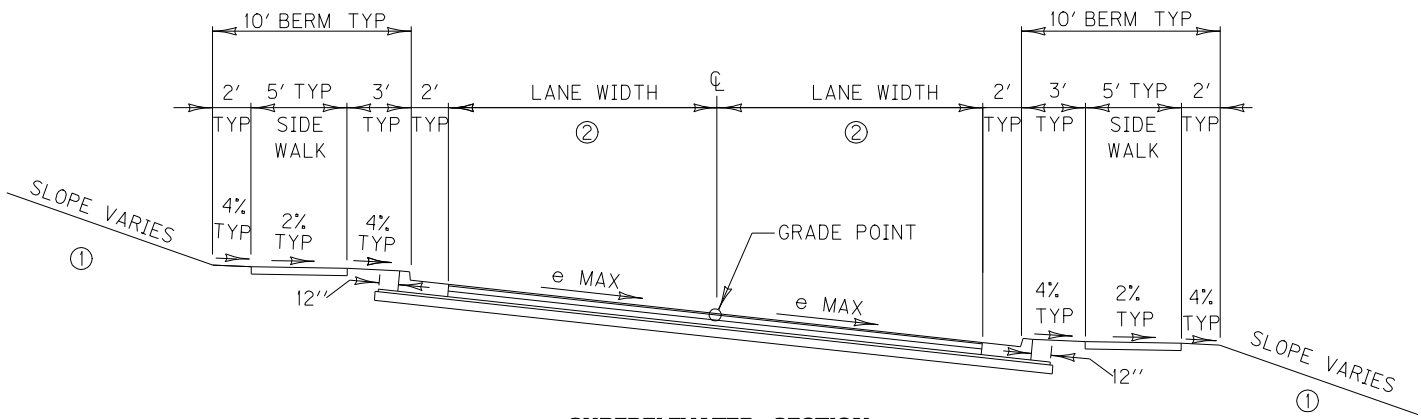

SUPERELEVATED SECTION

URBAN TWO-LANE
CURB AND GUTTER

① REFER TO AASHTO'S ''ROADSIDE DESIGN GUIDE'', CURRENT EDITION, FOR SPECIFIC SLOPE GUIDELINES.

② REFER TO AASHTO'S ''A POLICY ON GEOMETRIC DESIGN OF HIGHWAY AND STREETS'', CURRENT EDITION, FOR SUGGESTED LANE WIDTHS OF THE VARIOUS ROADWAY CLASSIFICATIONS. FOR ROADWAYS WITH ADT < 400, REFER TO AASHTO'S ''GEOMETRIC DESIGN GUIDELINES FOR VERY LOW-VOLUME LOCAL ROADS''.

DRAWING NOT TO SCALE