COMMON PRACTICE FOR RAMP TAPERS

EXHIBIT 900-02

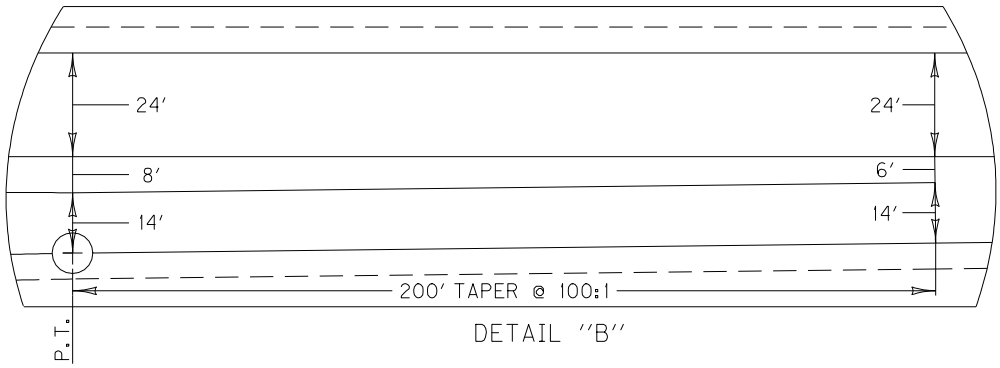

DETAIL ''B''

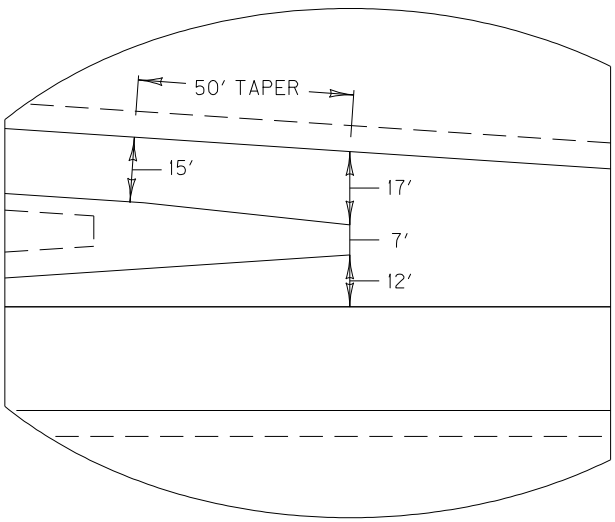

DETAIL ''A''

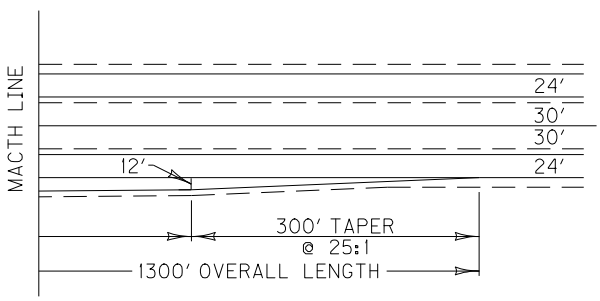

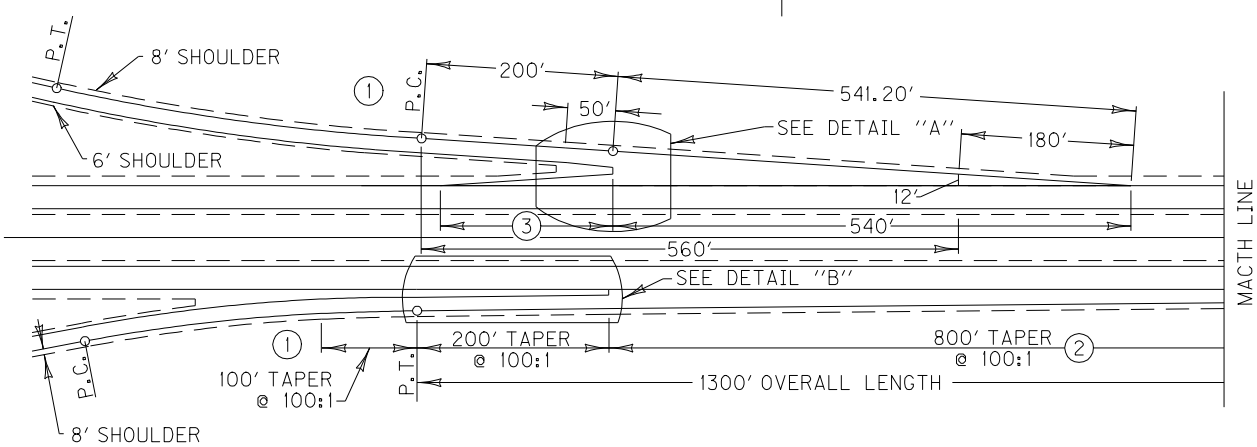

① DESIRABLE DESIGN SPEED OF CURVE IS ≥ .7 OF MAINLINE DESIGN SPEED, IF DESIGN SPEED OF CURVE IS < .7 OF MAINLINE DESIGN SPEED, MAKE AN ANALYSIS (IN ACCORDANCE WITH THE CURRENT AASHTO GREEN BOOK CRITERIA) WITH APPROPRIATE LENGTHENING OF SPEED CHANGE LANE.

② WHEN USING MAINLINE DESIGN SPEED IF ≥ 60 MPH AND MAINLINE GRADE OF ≥ 4% CONCURRENTLY. MAKE AN ANALYSIS (IN ACCORDANCE WITH THE CURRENT AASHTO GREEN BOOK CRITERIA) WITH APPROPRIATE LENGTHENING OF SPEED CHANGE LANE.

③ REQUIRED LENGTH OF NOSE TAPER BASED ON DESIGN SPEED OF MAINLINE:

MAINLINE DESIGN SPEED	LENGTH OF NOSE TAPER
≥ 30 MPH	180 FT.
40 MPH	240 FT.
50 MPH	300 FT.
≥ 60 MPH	360 FT.

DRAWING NOT TO SCALE